15-11 copy

LA-11073-MS

C.3

CIC-14 REPORT COLLECTION
REPRODUCTION
COPY

Los Alamos National Laboratory is operated by the University of California for the United States Department of Energy under contract W-7405-ENG-36

LOS ALAMOS NATIONAL LABORATORY
3 9338 00323 1254

Computer Simulation of the Dual-Edge Densitometer

Los Alamos
Los Alamos National Laboratory
Los Alamos, New Mexico 87545

An Affirmative Action/Equal Opportunity Employer

NOTICE

This report was prepared as an account of work sponsored by an agency of the United States Government. Neither the United States Government nor any agency thereof, or any of their employees, makes any warranty, expressed or implied, or assumes any legal liability or responsibility for any third party's use, or the results of such use, of any information, apparatus, product or process disclosed in this report, or represents that its use by such third party would not infringe privately owned rights.

NUREG/CR-4987
LA-11093-MS

RD

Simulated Seismic Tests on 1/42- and 1/14-Scale Category I, Auxiliary Building

Joel G. Bennett
Richard C. Dove*
Wade E. Dunwoody
Elton Endebrock
Charles Farrar
Peggy Goldman

Manuscript submitted: July 1987
Date published: October 1987

Prepared for
Division of Engineering
Office of Nuclear Regulatory Research
US Nuclear Regulatory Commission
Washington, DC 20555

NRC FIN No. A7221

LOS ALAMOS NATIONAL LABORATORY
3 9338 00323 1478

*Consultant at Los Alamos. 0764 C.R. 65, Del Norte, CO 81132.

Los Alamos
Los Alamos National Laboratory
Los Alamos, New Mexico 87545

CONTENTS

ABSTRACT 1

I. INTRODUCTION 1

II. CONSTRUCTION OF MODEL STRUCTURE 3

III. EXPERIMENTAL PROGRAM 7
A. 1/42-Scale Structure 7
B. 1/14-Scale Structure 8

IV. ANALYSIS 15

V. RESULTS 16
A. 1/42-Scale Structure 16
B. 1/14-Scale Structure 19

VI. DISCUSSION, CONCLUSIONS, AND RECOMMENDATIONS 20

VII. REFERENCES 22

APPENDIX A. SCALING OF THE 1/42- AND 1/14-SCALE STRUCTURES 23

APPENDIX B. CHARACTERISTICS OF THE SNL and CERL SEISMIC TEST FACILITIES 29

APPENDIX C. ANALYTICAL DETAILS 32

FIGURES

1. Isolated shear wall structure 3

2. Two-story building: models and prototype 4

3. Three-story auxiliary building: models and prototype 5

4. 1/42-scale structure under construction 6

5. 1/14-scale structure under construction 7

6. SNL shaker evaluation 9

7. 1/42-scale structure mounted on the SNL shaker 9

8. Location of accelerometers: 1/42-scale, bare model test 9

9. Masses added to simulate distributed mass in the prototype 10

10. 1/42-scale structure, with masses added, mounted on the SNL shaker 10

11. Location of accelerometers: 1/42-scale, masses-added test. 11

12. Location of accelerometers: 1/14-scale, bare model test. 13

13. 1/14-scale structure, with masses added, mounted on the CERL shaker 13

14. Location of accelerometers: 1/14-scale, masses-added test. 14

15. Base acceleration caused by unintentional table excursion. 15

16. First-mode frequency vs peak acceleration. 18

17. Test 02W transfer function, third-floor response to base input . . 19

A-1. Three-story auxiliary building: models and prototype 23

A-2. Method used to establish the structure's dynamic lumped mass equivalent. 25

A-3. Masses added to simulate distributed mass in the prototype 26

A-4. Prototype input signal 27

B-1. Sandia National Laboratory seismic simulator used in this program. 30

B-2. Construction Engineering Laboratory seismic simulator used in this program 31

C-1. Analytical model used to determine the natural frequency and mode shapes of the auxiliary buildings 35

TABLES

I. MICROCONCRETE PROPERTIES 5

II. REINFORCING PROPERTIES 6

III. TEST SEQUENCE 1/42-SCALE STRUCTURE, MASSES ADDED, TESTED AT SNL. . 11

IV. DATA SUMMARY 1/42-SCALE STRUCTURE. 16

V. COMPARISON OF MODAL FREQUENCIES AND STIFFNESS (1/42-SCALE STRUCTURE) 17

VI. DATA SUMMARY; 1/14-SCALE STRUCTURE 20

VII. COMPARISON OF MODAL FREQUENCIES AND STIFFNESS (1/42-SCALE STRUCTURE BARE). 21

A-I COMPUTATION OF ADDED MASSES. 28

SIMULATED SEISMIC TESTS ON 1/42- and 1/14-SCALE CATEGORY I, AUXILIARY BUILDING

by

Joel G. Bennett, Richard C. Dove, Wade E. Dunwoody,
Elton Endebrock, Charles R. Farrar, Peggy Goldman

ABSTRACT

Two scale-model structures representing an idealized auxiliary building were seismically tested. The scales (1/42, 1/14) were chosen so that both structures were models of the prototype, and the 1/42-scale model was a 1/3-scale model of the 1/14-scale structure. Both models were constructed out of microconcrete. The 1/42-scale used wire mesh to simulate reinforcing, and the 1/14-scale used model deformed bars. The general result verified previous test experience in this program: the frequency response of these structures, when subjected to seismic design loads, will be below that predicted for the structure using conventional analysis methods. This implies the frequency content and magnitude of floor response spectra, in general, will not be as predicted from the structural analysis. The implication of this result for equipment and piping is under investigation. The recommendation of this program, based on testing thus far, is to verify the conclusions on larger real concrete structures of a geometry that will be agreed upon by the technical review group for this program.

I. INTRODUCTION

The Seismic Category I Structures Program currently being carried out at the Los Alamos National Laboratory is sponsored by the Structural and Seismic Engineering Branch, Division of Engineering, of the U. S. Nuclear Regulatory Commission (NRC). This project is part of a program designed to increase confidence in the assessment of Category I nuclear power plant structural behavior beyond the design limit. The project is focused on answering questions regarding safety issues that may arise when existing nuclear facilities are subjected

to higher seismic loads than those considered in their original design. The program involves the design, construction, testing, and analyses of reinforced concrete models of auxiliary buildings, fuel-handling buildings, etc. The program does not include the reactor containment building. The overall goal of the program is to supply to the Nuclear Regulatory Commission experimental information and a validated procedure to establish the sensitivity of the dynamic response of these structures to earthquakes of magnitude beyond the design basis earthquake. The main purposes of the experimental program are (1) to obtain general information on how these structures behave in the inelastic range as compared with their behavior in the elastic range, (2) to provide stiffness and damping values for more demanding loadings on structures, (3) to identify changes in floor response spectra (used in design of systems and components) as the structures are loaded into the inelastic range, and (4) to provide experimental data for benchmarking inelastic structural analysis codes. More information on the background of this program is found in Ref. 1. Information on current program planning can be found in NUREG-1147, Rev. 1, Seismic Research Program Plan--Appendix C.

During FY 82, preliminary experiments were conducted on small, reinforced-concrete isolated shear walls (Fig. 1) that had been identified as the most important element in the Category I structures in this program. These preliminary experiments are reported in detail in Ref. 2.

The transition of the testing of isolated shear walls to small-scale structures began in FY 83. The structures were models of a prototypical Category I, isolated, two-story, diesel generator building. The shape and dimensions of the assumed prototype structure are shown in Fig. 2, with the dimension of two scaled models of this structure. These 1/30- and 1/10-scale models were tested during FY 83 and FY 84 and the results of these tests are presented in Ref. 3.

During early FY 85, attention was focused on a prototypical Category I, auxiliary building. Two scale models (1/42- and 1/14-scale) of this structure were constructed and tested. These scales were chosed so that wall thickness was the same as that of the diesel generator building model. Also, this configuration provided insights into the effects of different aspect ratio and number of floors. The shape and dimensions of the assumed prototype structure are shown in Fig. 3,with the dimensions of the two scaled models. This report

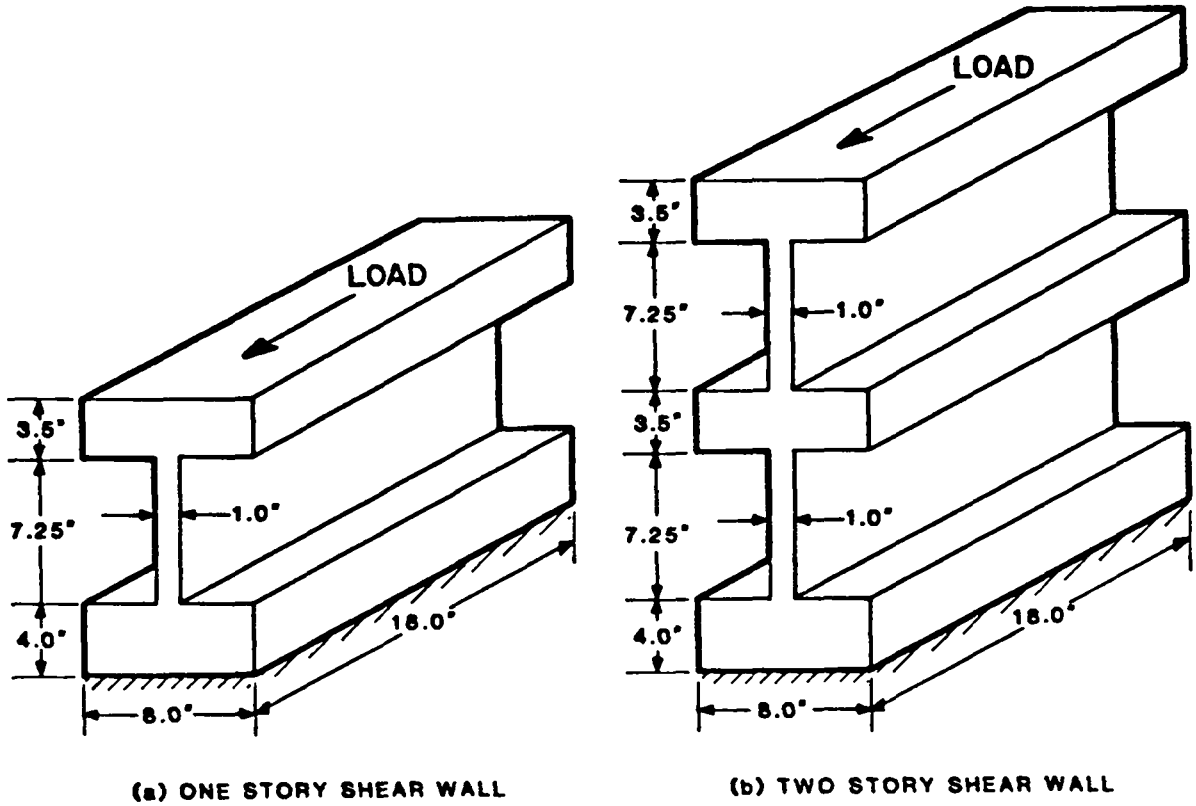

Fig. 1. Isolated shear wall structure.

covers (1) the construction of these models, (2) the test program, (3) analysis of the structures, (4) analytical and experimental results, (5) discussion of how these experimental results compare with the results from previous tests on 1/30- and 1/10-scale, two-story structures, (Ref. 3), and (6) additional experiments.

II. CONSTRUCTION OF MODEL STRUCTURES

The two structures tested were small-scale models of a prototypical Category I, auxiliary building. The shape and dimensions of the assumed prototype structure are shown in Fig. 3, with the dimensions of the two scaled versions of this structure.

The model structures were constructed using a microconcrete having the properties given in Table I.

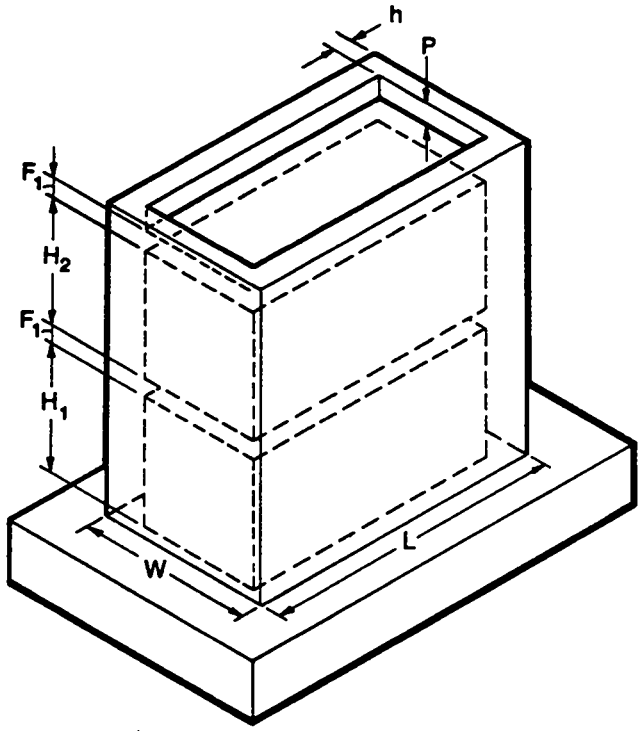

	h, F_1, F_2	W	L	H_1 & H_2	P	Wt/STORY *
1/30 SCALE	1 in.	10 in.	18 in.	7.25 in.	1 in.	47.7 lb
1/10 SCALE	3 in.	30 in.	54 in.	21.75 in.	3 in.	1286 lb
PROTOTYPE	30 in.	25 ft	45 ft	18.125 ft	30 in.	1,286,000 lb

*BASE NOT INCLUDED

NOTE: 1 in. = 25.4 mm, 1 ft = 0.305 m, 1 lb = 4.45 N

Fig. 2. Two-story building: models and prototype.

In the 1/42-scale model, the reinforcement consisted of 1/2-in. welded, (nonwoven), square mesh hardware cloth at each wall surface. This resulted in 0.28% reinforcement in each direction, on both wall surfaces. The 1/14-scale model was reinforced using a deformed model reinforcing rod obtained from the Portland Cement Association (PCA designation D-1-1). This rod was tied in a 1.0-in.-square mesh and was placed at each wall surface to give the same percentage reinforcement as was used in the 1/42-scale model.

The nominal reinforcement material properties are shown in Table II.

Regardless of scale, the sequence of model construction was the same. The base slab was cast with reinforcing wires or with bars embedded into the slab at the wall locations, and the base slab concrete was roughened where the walls would join the base. After the base slab had hardened, the reinforcing and the forms for the first-story walls and ceiling were put in place. Next, the microconcrete was placed and tamped and/or tamped and vibrated. The second-

and third-story construction was similar to the first story. After casting, the 1/42-scale model was placed into a moist chamber for 28 days of curing. The 1/14-scale model was wrapped in plastic during the curing period because it was too large for the moist chamber.

Figure 4 shows the 1/42-scale structure during construction; the base mat has been cast, the reinforcement has been assembled, and the inside and outside

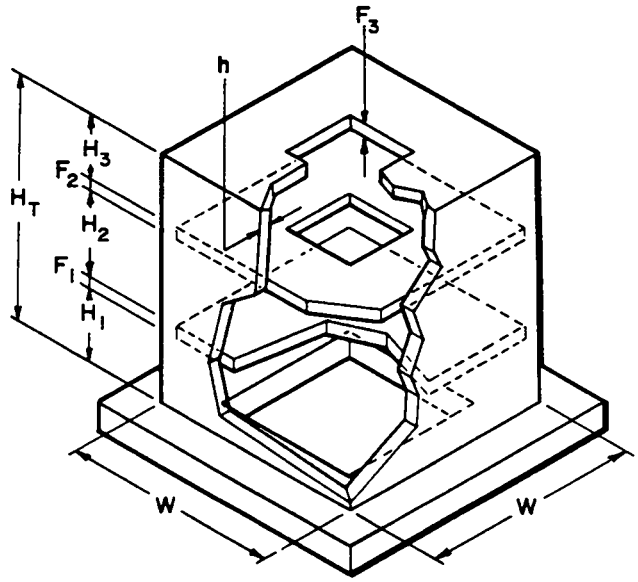

	h, F_1, F_2, F_3	W	H_1, H_2, H_3	Wt/STORY* (lb)
1/42 SCALE	1 in.	26 in.	10 in.	140
1/14 SCALE	3 in.	78 in.	30 in.	3780
PROTOTYPE	42 in.	1092 in.	42 in.	10,372,000

*BASE NOT INCLUDED

Fig. 3. Three-story auxiliary building: models and prototype.

TABLE I

MICROCONCRETE PROPERTIES

Measured Property Values	1/42-Scale Models (1-in.-thick wall)	1/14-Scale Models (3-in.-thick wall)
Ultimate compressive strength, f'_c	2900 psi	3320 psi
Tensile strength, f_t	380 psi	379 psi
Modulus of elasticity, E	2.7×10^6 psi	2.8×10^6 psi

TABLE II

REINFORCING PROPERTIES

Measured Property Values	1/42-Scale Models (1-in.-thick wall)	1/14-Scale Models (3-in.-thick wall)
Wire diameter	0.042 in.	1.113 in.
Yield stress	42,700 psi	42,400 psi
Ultimate tensile strength	53,100 psi	50,000 psi
Modulus of elasticity	25.6×10^6 psi	28.5×10^6 psi
Elongation	4%	13.1%

Fig. 4. 1/42-scale structure under construction.

forms (plexiglass) are in place. Figure 5 shows the 1/14-scale structure during construction. The base and first story have been cast and the forms (marine plywood) stripped, and the second-story reinforcement and inside forms are in place.

How these structures were scaled so as to appropriately model the prototype is discussed in Appendix A, "Scaling of the 1/42- and 1/14-Scale Structures." Scaling considerations for this program are, in general, detailed in Ref. 4.

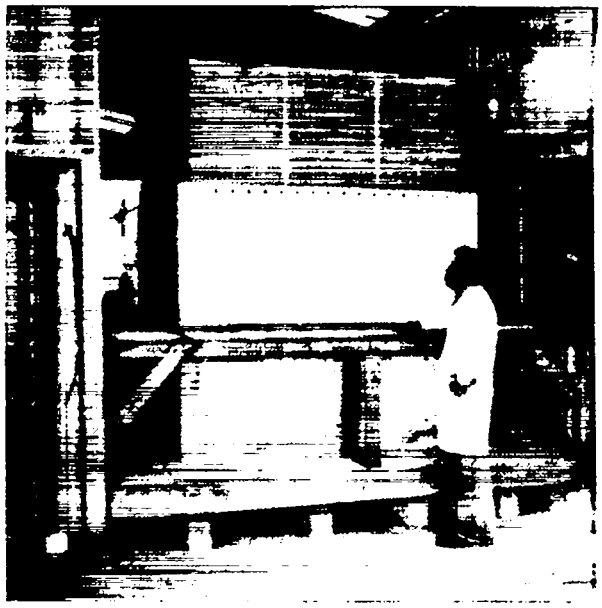

Fig. 5. 1/14-scale structure under construction.

III. EXPERIMENTAL PROGRAM

A. 1/42-Scale Structure

The 1/42-scale structure was transported from the Los Alamos National Laboratory to Sandia National Laboratory (SNL) by Los Alamos personnel on August 15, 1984. Before the structure was mounted on the SNL electrodynamic test facility,* Sandia personnel programmed their shaker control for the specified base acceleration vs time input signal. This acceleration vs time signal (supplied by Los Alamos in digital form) was a zero-corrected** record of 16 seconds duration of the 1940, El Centro, N-S earthquake, time-scaled by a factor of 14.24.*** The signal duration was

$$\frac{16}{14.24} = 1.12 \text{ s} \quad .$$

* See Appendix B for a description and specifications of the SNL test facility.

** The base line acceleration is corrected so that the final velocity (computed as $\int a dt$) is zero.

*** See Appendix A.

Before mounting the 1/42-scale structure, the test facility was evaluated by mounting lumped masses on the table and by applying the desired test signal at progressively larger peak acceleration levels. The lumped masses attached to the shaker table are shown in Fig. 6. The total mass added weighed 1924 lb ; this compares with a total weight of 1985 lb for 1/42-scale, with the masses that were attached to it during the final test. The facility was found to be capable of reproducing the command signal with a high degree of fidelity over the entire range from 1 g to 9 g maximum peak acceleration. Note, however, that this test mass was a noncompliant structure as compared with the 1/42-scale model, and the center of gravity was lower in these trial runs.

Following the evaluation of the test facility, the 1/42-scale structure was mounted on the shaker table, as shown in Fig. 7. Accelerometers were mounted on the structure (Fig. 8). In this condition ("bare," i.e. no mass added to the structure), the structure was subject to pulses of low-level, broad band excitation (± 0.5 g peak, 0 - 1000 Hz). With a bare model, and with low level, broad-band excitation, the modal frequencies can be determined with a minimum of structural damage. These measured modal frequencies can then be compared with the values predicted by theoretical analysis and with those obtained from similar tests on the 1/14-scale structure. Following these bare model tests, masses were added at each story level to model the effect of the distributed mass of the prototype. Figure 9 gives the values of the added masses and Fig. 10 shows the structure, with masses attached mounted on the shaker table at SNL. Accelerometers were mounted on the structure as shown (Fig. 11). In this condition (masses added to simulate prototype distributed mass), the structure was subjected to a series of tests (Table III). These tests were conducted to determine how the structure modal frequencies are affected by increasing levels of seismic excitation. The results of these tests will be compared with the results from similar tests on the 1/14-scale structure and with tests previously performed on two-story structures.

B. 1/14-Scale Structure

The 1/14-scale structure was transported to the Construction Engineering Research Laboratory (CERL) located at Champaign, Illinois, by commercial freight and arrived on November 28, 1984. Before the structure was mounted on

Fig. 6. SNL shaker evaluation.

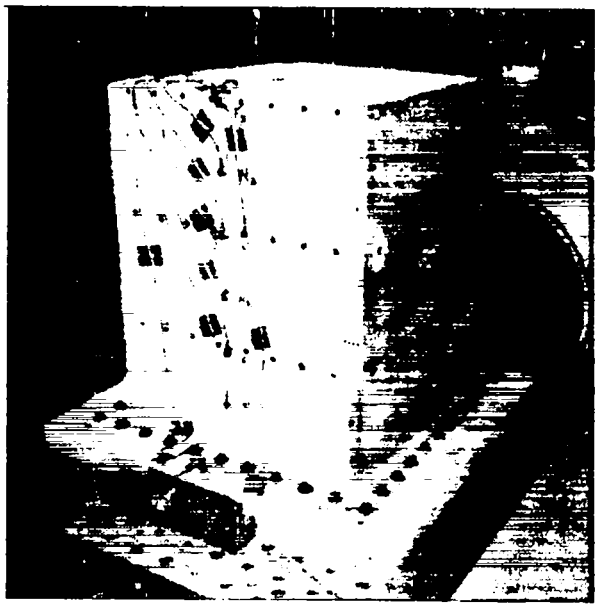

Fig. 7. 1/42-scale structure mounted on the SNL shaker.

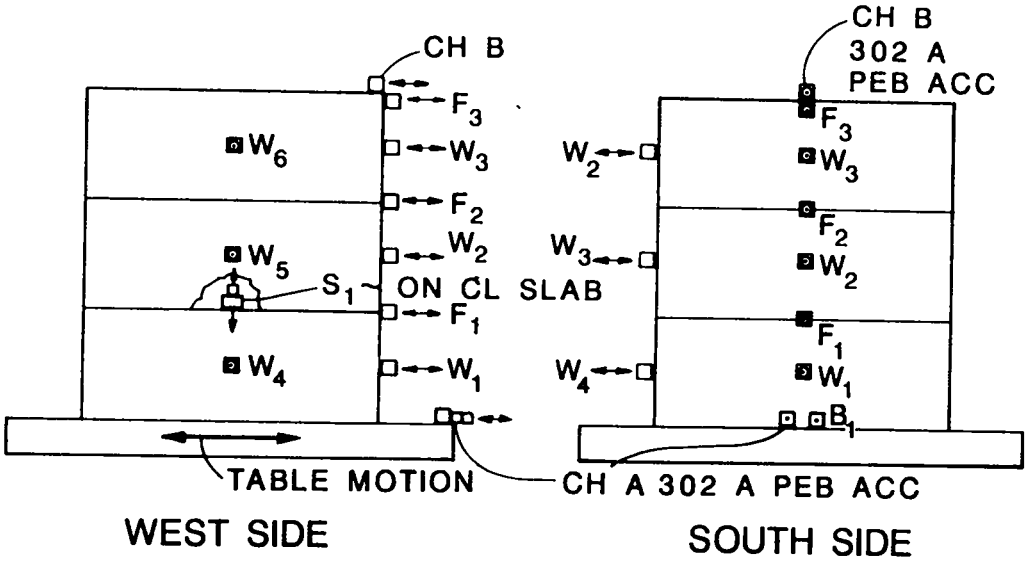

Fig. 8. Location of accelerometers: 1/42-scale, bare model test.

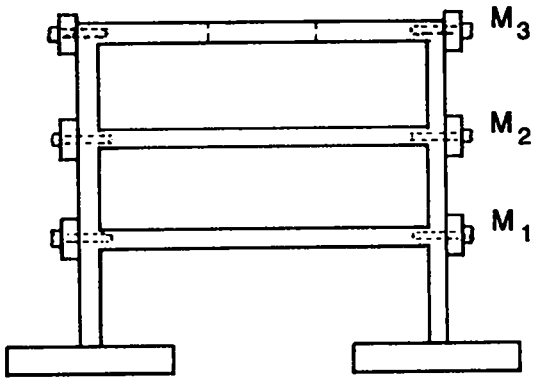

STRUCTURE	M_1 (lbs)	M_2 (lbs)	M_3 (lbs)
1/42-SCALE	500	460	395
1/14-SCALE	3334	3060	2631

Fig. 9. Masses added to simulate distributed mass in the prototype.

Fig. 10. 1/42-scale structure, with masses added, mounted on the SNL shaker.

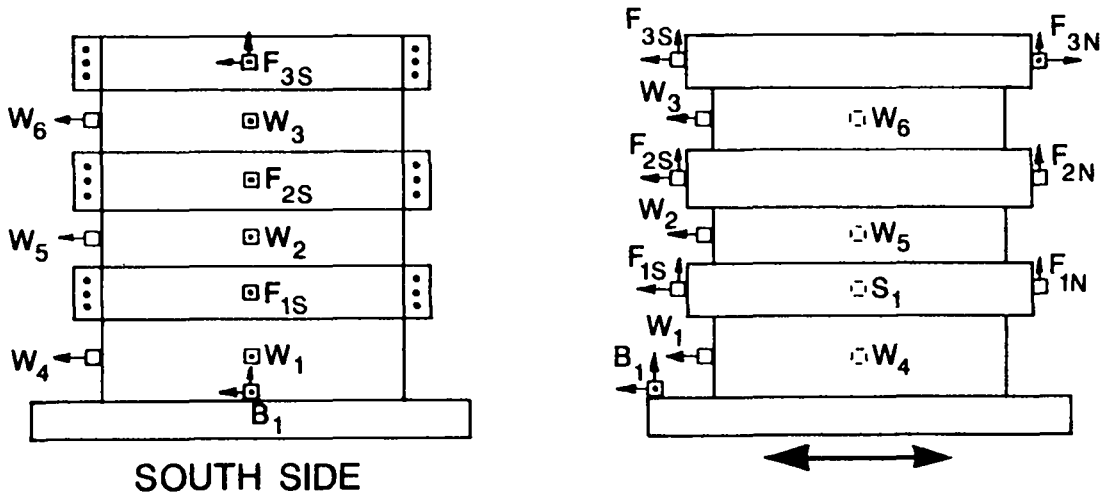

Fig. 11. Location of accelerometers: 1/42-scale, masses-added test.

TABLE III

TEST SEQUENCE 1/42-SCALE STRUCTURE, MASSES ADDED, TESTED AT SNL

Test No.	Test Signal
02W	± 0.17-g random, to established system trans. function
03W	0.50-peak; simulated seismic
04W	± 0.34-g white noise burst (0.6-s duration)
05W	1.0-g peak; simulated seismic
06W	repeat of 04W
07W	2.0-g peak; simulated seismic
08W	repeat of 04W
09W	3.0-g peak; simulated seismic
10W	repeat of 04W
11W	4.0-g peak; simulated seismic
12W	repeat of 04W
13W	5.0-g peak; simulated seismic
14W	repeat of 04W
15W	6.0-g peak; simulated seismic final test, shear failure at base

the CERL servohydraulic test facility,* the facility was evaluated by attaching a total of 25,780 lb of dead weight to the table (the weight of 1/14-scale structure, with attached masses) and by driving the system with the acceleration vs time signal supplied by Los Alamos. This signal is the zero-corrected, 1940, El Centro, N-S earthquake time history of 16-s duration scaled by a factor of 8.22, i.e. the signal duration was 16/8.22 = 1.95 s. During these deadweight tests, using this input signal, the table was driven to a peak acceleration of approximately 12 g. This was judged to be adequate for the tests on the 1/14-scale structure.

Following this evaluation of the test facility, the 1/14-scale structure was mounted on the shaker table. Accelerometers were mounted on the structure (Fig. 12). In this condition ("bare" i.e. no masses added to the structure), the structure was to be subjected to pulses of low-level, broad-band excitation. Unfortunately, before this test could be conducted, the test facility suffered an uncontrolled loss in hydraulic pressure (probably due to excessive oil temperature) and the table lurched from near mid-position to the end stops. This subjected the structure to a base acceleration pulse of large, but unknown, magnitude. Following this uncontrolled pulse, the structure was reinspected (visually) and cracks were observed in the first-story walls near the base. Data were not being recorded during this excursion; however, prior to the excursion, data from the accelerometers were being recorded while the facility was being exercised to warm up the hydraulic fluid. This input signal (0.2 Hz sinusoidal motion, on which was a superposed 60-Hz noise) that produced a peak-to-peak acceleration input at the base of 0.23 g, was used to compute transfer functions and to determine the modal frequencies of the structure before the accidental, and damaging, table excursion occurred.

After this accidental table excursion, the model was known to be damaged (from the visual inspection), but because the extent of the damage was unknown, it was decided to continue with the test program as originally planned. As a result, a random motion test was made on the bare model.

The appropriate masses to simulate the distributed mass of the prototype, were attached to the structure (Figs. 9 and 13). Instrumentation

* See Appendix B for a description and specifications of the CERL test facility.

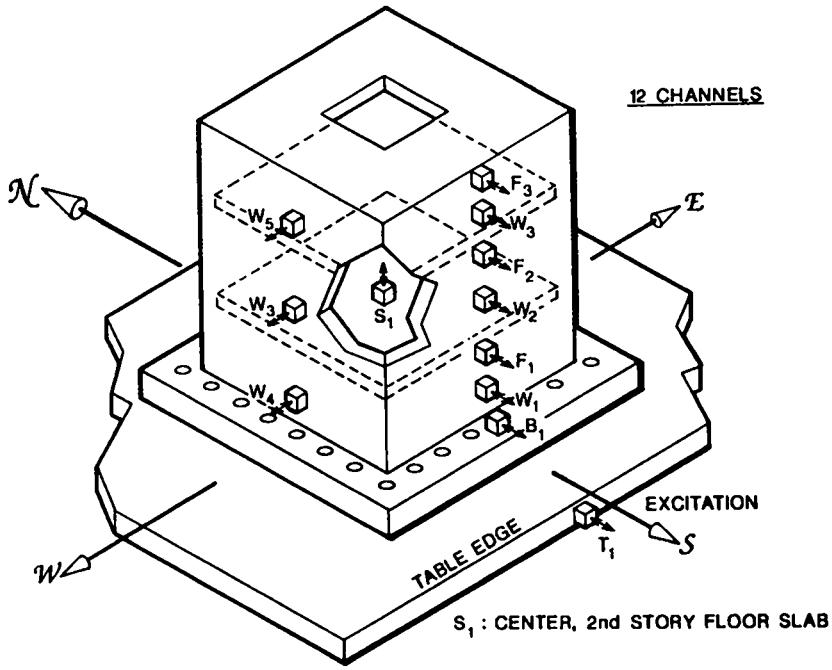

Fig. 12. Location of accelerometers: 1/14-scale, bare model test.

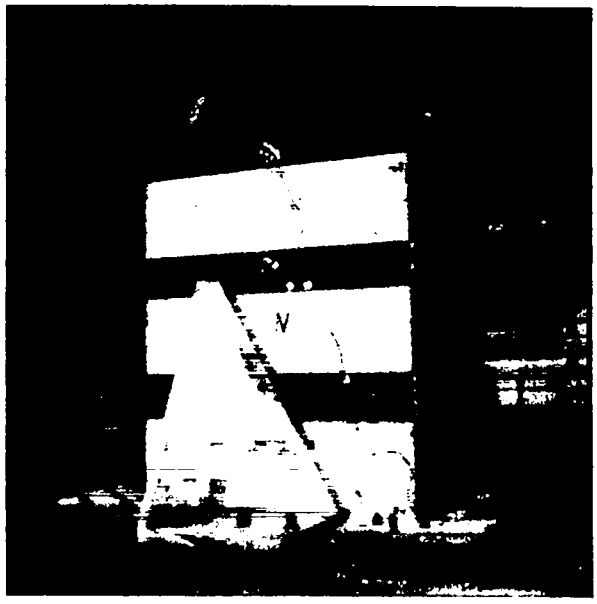

Fig. 13. 1/14-scale structure, with masses added, mounted on the CERL shaker.

(displacement transducers and accelerometers) was installed, as shown in Fig. 14. During the CERL system start-up procedure for these tests, operational difficulties were again experienced and 3 unintentional table excursions (bumps against the table stops) occurred. Data from all channels were being recorded during this start-up procedure; as a result, the magnitude of input acceleration and response due to these unintentional loadings is known. Figure 15 shows the base acceleration vs time input pulse due to the second set of unintentional table excursions. These were relatively high-magnitude loads (2.1-g peak acceleration at the base), and analysis of the data recorded during these excursions showed that they caused additional damage to the structure. After a one-day delay, during which the CERL operators undertook modification

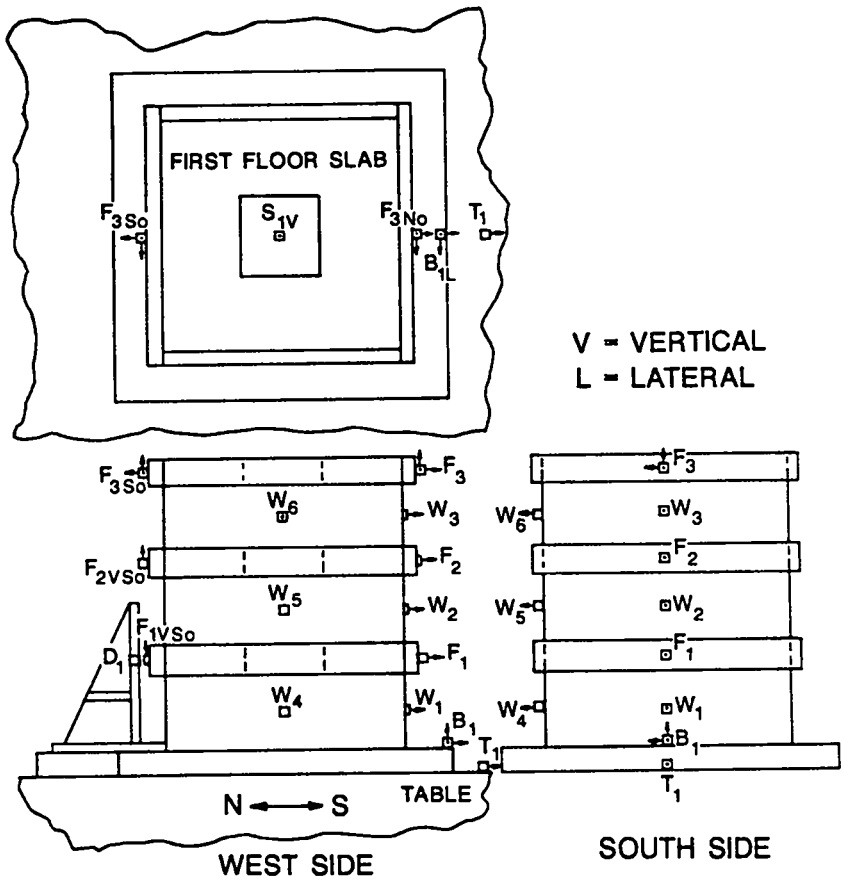

Fig. 14. Location of accelerometers: 1/14-scale, masses-added test.

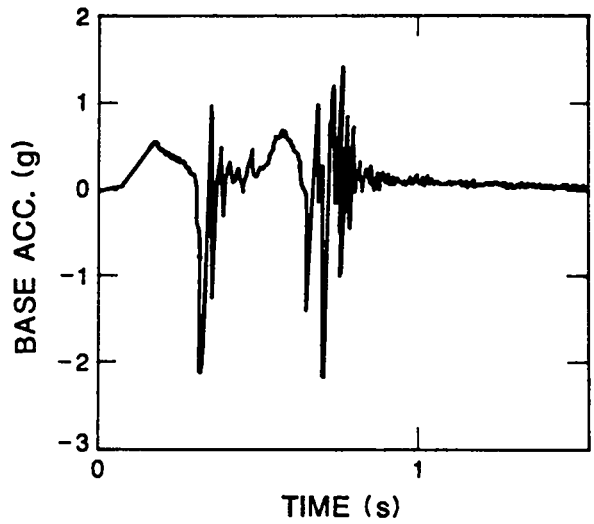

Fig. 15. Base acceleration caused by unintentional table excursion.

of the facility, the system was successfully restarted and simulated seismic tests at nominal levels of 0.5, 1.0, 2.0, 3.0, and 4.0 g were conducted on the already damaged structure. At the 4-g level and above, it was found that the facility was incapable of generating the desired test pulse, because the overturning moment limit was exceeded and the system would shut down at mid-pulse. Calculations showed that the actual overturnings moment was about 20% of the manufacturer's specified limit. At this point, testing was discontinued and the CERL personnel called in the manufacturer's (MTS) representative to analyze the system's problems.

IV. ANALYSIS

While the 1/42- and 1/14-scale structures were being tested, the basic structure was analyzed using standard modal analysis techniques with a 3 degree-of-freedom, lumped-mass idealization of the structure. The details of this calculation (calculation of moments-of-inertia, stiffness, masses, and the solution of the equations of motion) are given in Appendix C. The results of the analytical investigation are compared with the experimental results in the following section of this report.

V. RESULTS

A. 1/42-Scale Structure

The 1/42-scale structure was subjected to low-level bursts of random input before masses were attached to determine the structure modal frequencies in a as nearly-virgin condition as possible. The results of this test are given in Table IV, which shows the measured modal frequencies (f_1, f_2, f_3) together with the values computed using the method explained in Appendix C.

These measured values of modal frequencies are compared with the computed values in Table V. Further, assuming that modal frequency is proportional to the square root of the stiffness (K), the effective stiffness is compared with the computed stiffness. These ratios of $K_{measured}/K_{computed}$ appear to be consistent with the values for "reduction in stiffness" that we observed in previous tests.[2,3]

TABLE IV

DATA SUMMARY 1/42-SCALE STRUCTURE

Model Condition	No.	Test Description	Modal Frequency (Hz) Measured f_1	Measured f_2	Measured f_3	Computed f_1	Computed f_2	Computed f_3
I. Bare	II	± 1-g random 0-1000 Hz	187	605	910	435	1185	1705
II. Masses added	02W	± 0.17-g random 0-500 Hz	80	236	327	156	425	609
	03W	Simulated 0.5-g pk. Seismic	79	235	330			
	05W	Simulated 1.0-g pk.	78	231	NA			
	07W	Simulated 2.0-g pk.	73	221	NA			
	09W	Simulated 2.9-g pk.	69	222	NA			
	11W	Simulated 6.2-g pk.	60	197	NA			
	13W	Simulated 6.7-g pk.	47	205	NA			
	15W	Simulated 10.7-g pk.	<30	NA	NA			

Following these bare model tests, masses were attached to simulate the distributed mass in a prototype structure. In this condition, the structure was first subjected to a low-level random excitation. Following this, it was subjected to a series of simulated seismic events of increasing peak acceleration. The results of these tests are also presented in Table IV.The model failed, by cracking, where the first story walls joined the base, during test number 15W.

With mass added, the measured modal frequencies can again be compared with computed values. This has been done for the first test (no. 02W, when the structure is presumedly in a near-virgin condition) in Table V. Here again, the "reduction in stiffness" observed is consistent with previous findings.

The seismic test data shown in Table IV have been plotted in Fig. 16. In this plot, the observed first-mode frequency and the peak base acceleration

TABLE V

COMPARISON OF MODAL FREQUENCIES AND STIFFNESS

(1/42-SCALE STRUCTURE)

A. Bare

	Modal Freq. (Hz) f_1, f_2, f_3	$\frac{f\ meas.}{f\ comp.}$	$\frac{K\ meas.}{K\ comp.} = \left(\frac{f\ meas.}{f\ comp.}\right)^2$
Meas.	187, 605, 910		
Comp.	435, 1185, 1705	0.43, 0.51, 0.53	0.18, 0.26, 0.28

B. Mass Added

	Modal Freq. (Hz) f_1, f_2, f_3	$\frac{f\ meas.}{f\ comp.}$	$\frac{K\ meas.}{K\ comp.} = \left(\frac{f\ meas.}{f\ comp.}\right)^2$
Meas. (test 02W)	80, 236, 327		
Comp.	156, 425, 609	0.51, 0.56, 0.54	0.26, 0.31, 0.29

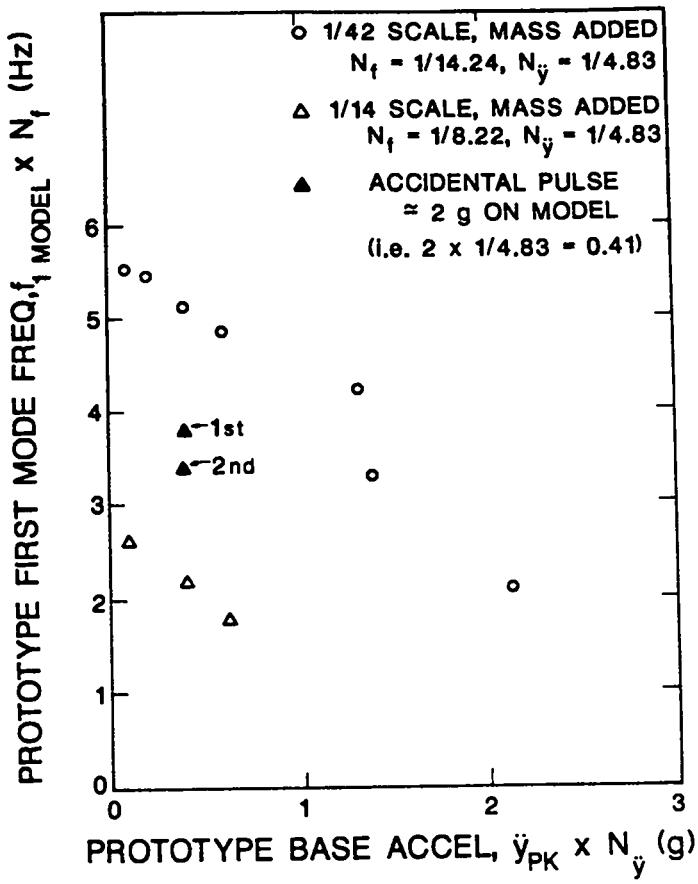

Fig. 16. First-mode frequency vs peak acceleration.

have been normalized to prototype values by multiplying by the frequency and acceleration scales.*

This plot indicates that the effective stiffness decreases progressively as the magnitude of the seismic input increases. This is the same trend as was observed in previous tests on two-story Category I structures.[3]

The values of effective viscous damping ratio were measured during several of these tests using the transfer function (width of the peaks on the real part of the transfer function) techniques.[3] These values ranged from 2-5% (Fig. 17).

---

* This normalization makes it possible to plot the results from tests on both structures (1/42- and 1/14-scale) on the same sheet so that the results can be compared.

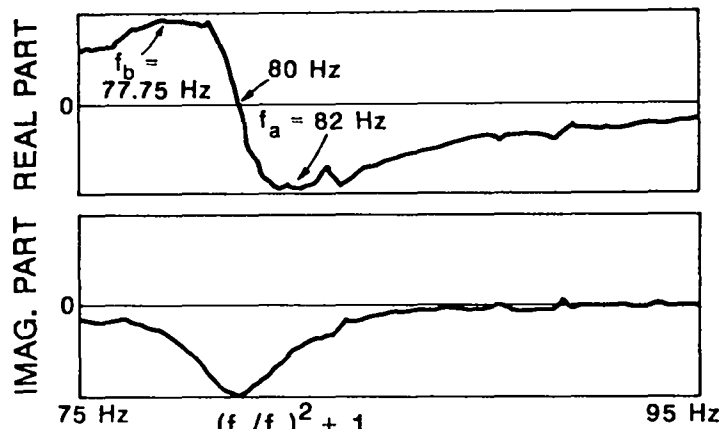

$$Q = \frac{(f_a/f_b)^2 + 1}{(f_a/f_b)^2 - 1} = 18.86$$

$$\zeta = 1/2Q = 2.65\%$$

Fig. 17. Test 02W transfer function, third-floor response to base input.

B. 1/14-Scale Structure

As explained in a previous section of this report, the 1/14-scale structure was damaged during the bare model test. Therefore, it is of interest to compare the measured modal frequencies before the damaging accident with those measured after the accident. The data necessary for this comparison are given in Table VI. The decrease in first-mode frequency (from 57 to 38 Hz) is a clear indication of damage.

Table VII allows the comparison of measured modal frequencies (before the damage occurred) to the computed values and to the values predicted from the 1/42-scale structures. The data in this table indicate that even in the supposedly undamaged condition this larger structure (1/14-scale) has a somewhat greater reduction in stiffness (as compared with the computed value) than did the smaller structure (1/42-scale), but the results are still in line with previous findings reported in Ref. 2 and 3. Further, before the damage, the modal frequencies predicted for the 1/14-scale structure by the 1/42-scale structure are in reasonable agreement with the measured values.

The data taken during tests on the 1/14-scale structure with added mass are also presented in Table VI. As previously pointed out, all of these tests

TABLE VI

DATA SUMMARY, 1/14-SCALE STRUCTURE

Model Condition	Test Description	Modal frequency (Hz) Measured f_1,	f_2,	f_3	Computed f_1,	f_2,	f_3
I. Bare	Low-level noise (± 0.239 g) during system start-up before table excursion.	57,	172,	299	149,	408,	587
	Low-level (± 1 g) random (6-200 Hz) after table excursion.	38,	161,	285			
II. Mass added	First accidental pulse; ≃ 2 g, see Fig. 15.	31,	NA,	NA			
	Second accidental pulse: ≃ 2 g	28,	NA,	NA			
	Simulated seismic* 0.5-g pk.	21,	45,	90			
	Simulated seismic 3.0-g pk.	18					
	Simulated seismic 3.0-g pk**.	15					

* A third accidental pulse preceeded this first simulated seismic test.
** Simulated seismic tests to peak values greater than 3 g were not possible, because the overturning movement shut the machine down.

were conducted on an already damaged structure. These first-mode frequency values have been plotted on Fig. 16, which clearly indicates that the damaged 1/14-scale structure is not modeled by the 1/42-scale structure.

VI. DISCUSSION, CONCLUSIONS, AND RECOMMENDATIONS

The geometry of the auxiliary building is different from that of the diesel generator buildings reported in Ref. 3, and two different scales have been used. The data here support all conclusions of the 1/30- and 1/10-scale tests reported in Ref. 3 with the exception that scalability between models, and thus to the prototype, is not demonstrated because the 1/14-scale model was damaged during pretesting. Even so, the results on Fig. 16 point to the

TABLE VII

COMPARISON OF MODAL FREQUENCIES AND STIFFNESS

(1/14-SCALE STRUCTURE BARE)

	Modal Freq. (Hz)								
	f_1	f_2	f_3	$\frac{f\ meas.}{f\ comp.}$			$\frac{K\ meas.}{K\ comp.} = \left(\frac{f\ meas.}{f\ comp.}\right)^2$		
Computed	149,	408,	587						
Measured									
a. before damage	57,	172,	299	0.38,	0.42,	0.51	0.14,	0.18,	0.26
b. after damage	38,	161,	285	0.25,	0.39,	0.48	0.06,	0.15,	0.23
Predicted* from 1/42-scale tests.	62,	201,	303						

* $f(1/14\text{-scale}) = \frac{f(1/42\text{-scale})}{N_f}$.

$N_f = 3$ for bare model.

fact that the prototype auxiliary building structure response at earthquake design loads will be significantly different from the response that would be calculated based upon an uncracked strength-of-materials approach. This difference between the response from analysis and experiment has been the subject of much interest by the technical review group (TRG) for this program, because equipment and piping design considerations are based on calculated primary structure response.

Because of the analytical/experimental difference, it was concluded that credibility must be established for the predicted behavior found here and in Ref. 2 and 3. The Los Alamos National Laboratory program management and the TRG have worked to define a structure and test program that will establish this credibility during FY 85 and beyond (see Ref. 5).

VII. REFERENCES

1. E. G. Endebrock, R. C. Dove, and C. A. Anderson, "Margins to Failure - Category-I Structures Program: Background and Experimental Program Plan," Los Alamos National Laboratory report LA-9030-MS, NUREG 2347 (September 1981).

2. E. G. Endebrock, R. C. Dove, and W. Dunwoody, "Analysis and Tests on Small-Scale Shear Walls - FY-82 Final Report," Los Alamos National Laboratory report LA-10443-MS, NUREG/CR-4274 (September 1984).

3. R. C. Dove, J. G. Bennett, C. R. Farrar, and C. A. Anderson, "Seismic Category I Structures Program - Final Report, FY 1983-84, Los Alamos National Laboratory report LA-11013-MS, NUREG/CR-4924 (July 1987).

4. R. C. Dove and J. G. Bennett, "Scale Modeling of Reinforced Concrete Category I Structures Subjected to Seismic Loading," Los Alamos National Laboratory report LA-10624-MS, NUREG/CR - 4474 (January 1986).

5. "Seismic Safety Research Program Plan," Division of Engineering Safety, U. S. Nuclear Regulatory Commission report NUREG-1147, Rev. 1 (June 1987).

APPENDIX A

SCALING OF THE 1/42- and 1/14-SCALE STRUCTURES

The 1/42-scale structure (1-in. wall thickness) and the 1/14-scale structure (3-in. wall thickness) were designed, constructed, and tested so that each size of structure was a Case III scale model of the assumed prototype auxiliary building (42-in. wall thickness); and in addition, the smaller (1/42-scale) structure was a 1/3-scale, Case II model of the larger (1/14-scale) structure. The various types of modeling (Case I, Case II, and Case III) are discussed in detail in Ref. 1, together with the scaling laws that must be fulfilled for each case. In this appendix, the design of the structures and test conditions is outlined so that the scaling laws are fulfilled.

The structures being considered are shown in Fig. A-1. Both model structures were constructed using microconcrete and steel reinforcement. It was intended that the concrete and steel material properties would be the same as

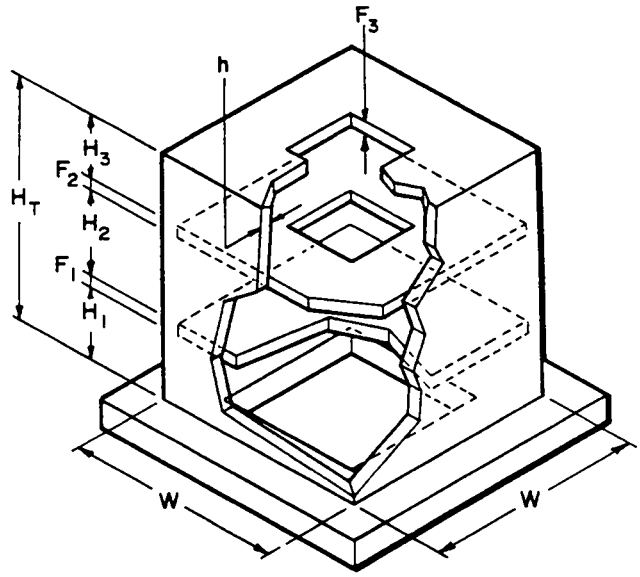

	h, F_1, F_2, F_3	W	H_1, H_2, H_3	Wt/STORY* (lb)
1/42 SCALE	1 in.	26 in.	10 in.	140
1/14 SCALE	3 in.	78 in.	30 in.	3780
PROTOTYPE	42 in.	1092 in.	42 in.	10,372,000

*BASE NOT INCLUDED

Fig. A-1. Three-story auxiliary building: models and prototype.

those of the prototype materials. For the 1/42-scale structure, the length scale, N_h is 42; and for the 1/14-scale structure, $N_h = 14$. The length scales were selected (i.e. the sizes selected) as the smallest size (1/42-scale) that we believed we could fabricate with good modeling of the reinforcement detail and as the largest size (1/14-scale) that could be tested on the seismic simulator at the Construction Engineering Research Laboratory (CERL).

It was decided that each structure was to serve as a Case III model of the assumed prototype. This decision was made because it is necessary to have control of the acceleration scale, N_a, the mass scale, N_m, and the time scale, N_t, if these models are to be tested on the available seismic simulators. For both structures, the acceleration scale was selected as 1/4.83, i.e. 4.83 g, on the model equals 1 g on the prototype; this selection was made so that the 1/42-scale model could be tested on the electrodynamic seismic simulator at SNL and the 1/14-scale model of the servohydraulic seismic simulator CERL.

For a Case III model, the scaling laws are:

$$N_a = Q \quad ,$$

$$N_m = \bar{N}_h^2 / Q \quad , \text{ and}$$

$$N_t = \sqrt{\bar{N}_h / Q} \quad ,$$

where N_h is the selected length scale and Q is the selected acceleration scale. For a Q value of 1/4.83, this selection results in:

$$\bar{N}_h = 42 \quad ,$$

$$N_a = 1/4.83 \quad ,$$

$$N_m = 8523 \quad , \text{ and}$$

N_t = 14.24 for the 1/42-scale structure and

$N_h = 14$,

$N_a = 1/4.83$,

$N_m = 947$, and

$N_t = 8.22$ for the 1/14-scale structure..

With the mass scale established, it is possible to design the masses that must be added to the model structures to properly simulate the distributed mass of the prototype. The procedure is as follows:

1. The dynamic lumped mass equivalent of the prototype distributed mass at each floor level, $(DLME)_p$, is taken as the mass of the structure concentrated at a given floor level, plus a fraction of the distributed mass (walls) on both sides of that level (Fig. A-2).

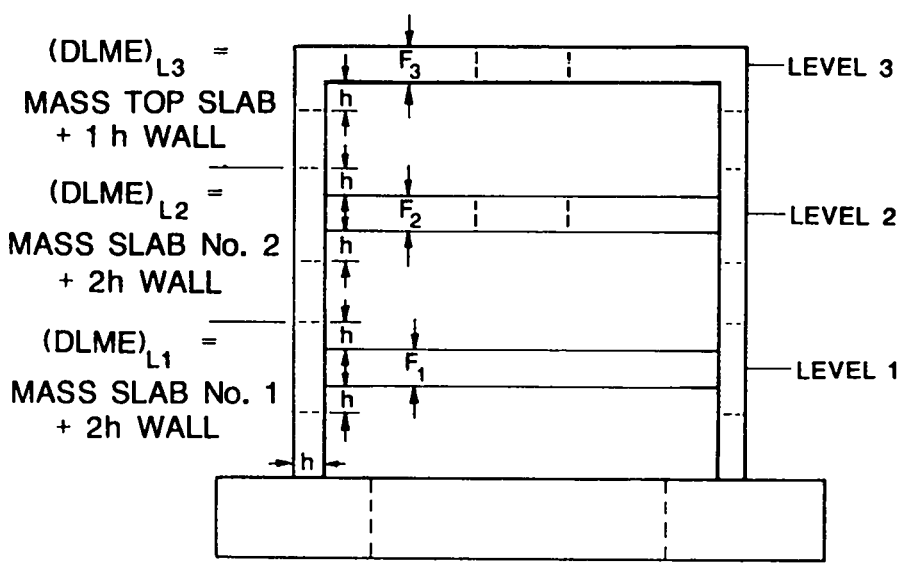

Fig. A-2. Method used to establish the structure's dynamic lumped mass equivalent.

2. The required dynamic lumped mass equivalent of the model distributed mass at each level, $(DLME)_m$, is then computed as

$$(DLME)_m = \frac{(DLME)_p}{N_m} .$$

3. The amount of mass that must be added to the model to obtain the required $(DLME)_m$ is then computed as

$$\text{Required Added Mass} = (DLME)_m - \frac{(DLME)_p}{\bar{N}_h^{\,3}} .$$

The results of these computations are shown in Table A-I. The method of attaching the added mass is shown in Fig. A-3.

With the model construction complete (including the attached masses) and with the scales established, the test conditions can be specified. Both models were to be subjected to a properly scaled version of the 1940 El Centro N-S accelerogram. The base-line corrected version of this signal that was selected as the desired prototype base motion input is shown in Fig. A-4. At each test facility (SNL and CERL), this signal was entered into the seismic simulator

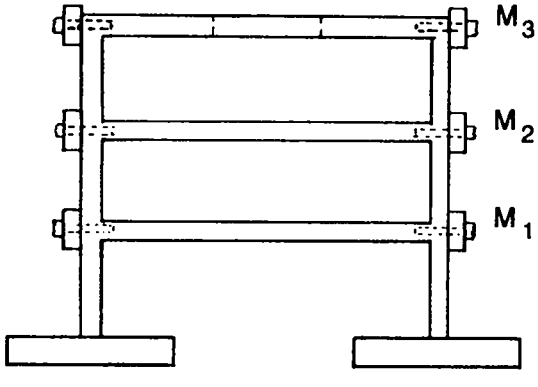

STRUCTURE	M_1 (lbs)	M_2 (lbs)	M_3 (lbs)
1/42-SCALE	500	460	395
1/14-SCALE	3334	3060	2631

Fig. A-3. Masses added to simulate distributed mass in the prototype.

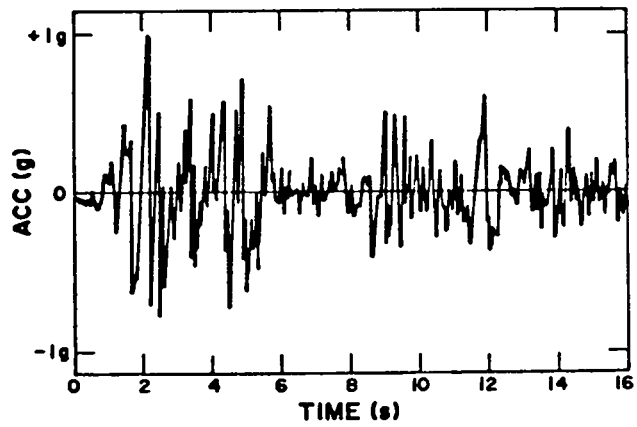

Fig. A-4. Prototype input signal.

control system in digital form. It was then time-scaled as appropriate, but the assigned time step value between points was changed. For the tests conducted on the 1/42-scale model (N_t = 14.24 tested at SNL), the signal was scaled so that the total test duration was 16/14.24 = 1.12 s and, hence, all frequency components were increased by a factor of 14.24. Likewise, the input signal for the tests of the 1/14-scale model (N_t = 8.22 tested at CERL) time was scaled by a factor of 8.22.

Both of the model structures were subjected to properly time-scaled seismic inputs having a progressively larger peak value, a_{pk}. A peak value of 4.83 g/1 g of prototype acceleration was used. Measured response accelerations are, of course, interpreted in the same way; i.e. a 4.83-g response represents 1-g response in the prototype, etc.

Note that velocities (v) are scaled as $N_v = N_a N_t$ and displacements (y) as N_h. Forces are scaled as $N_f = N_m N_a$.

It should be noted that, because both of these model structures were designed using the same acceleration scale (N_a = 1/4.83, relative to the prototype), they are Case II models of each other; that is, the acceleration scale relating these two model structures is unity (1). Hence, results obtained from the tests on these two structures should be related as:

$$\text{Displacement}_{(1/14)} = 3 \times \text{Displacement}_{(1/42)} ,$$

$$\text{Acceleration}_{(1/14)} = 1 \times \text{Acceleration}_{(1/42)} ,$$

$$\text{Time}_{(1/14)} = 3 \times \text{Time}_{(1/42)}, \text{ and}$$

$$\text{Frequency}_{(1/14)} = \frac{1}{3} \times \text{Frequency}_{(1/42)}$$

TABLE A-I

COMPUTATION OF ADDED MASSES

Model Structure	Assumed $(DLME)_p$ (lb)	Required Added Mass (lb)
1. 1/42-scale structure		
Level 1	4.82×10^6	500
Level 2	4.43×10^6	460
Level 3	3.80×10^6	395
2. 1/14-scale structure		
Level 1	4.82×10^6	3334
Level 2	4.43×10^6	3060
Level 3	3.80×10^6	2631

REFERENCE

1. R. C. Dove and J. G. Bennett, "Scale Modeling of Reinforced Concrete Category I Structure Subjected to Seismic Loading," Los Alamos National Laboratory report LA-10624-MS, NUREG/CR - 4474 (January 1986).

APPENDIX B

CHARACTERISTICS OF THE SNL AND CERL SEISMIC TEST FACILITIES

The Sandia National Laboratory (SNL) test facilities used in this project to test the 1/42-scale model consists of a Gilmore, Model C220, electrodynamic shaker driving a 4 ft x 5 ft horizontal table mounted on 6 team bearings. The pertinent characteristics of the system are:

Max. force -- 32,000 lb
Max. velocity -- 70 in./s
Max displacement -- ± 0.5 in.

A photograph of this facility (with calibration weights mounted on the test table) is shown in Fig. B-1.

The 1/14-scale structures discussed in this report were tested on the servohydraulic vibration test facility operated by the Construction Engineering Research Laboratory (CERL) at Champaign, Illinois. This is a biaxial machine (one horizontal axis plus vertical), but only single axis motion (horizontal) was used in these tests. Test items are mounted on 12 ft x 12 ft welded aluminum table that can support a dead weight of 810,000 lbs.

The system is capable of:

- Vertical Motion
  810,000 lbs force,
  Approximately 50-g peak acceleration (table),
  27-in./s peak velocity, and
  ± 1.375 in. displacement.

- Horizontal Motion
  450,000 lb force
  Approximately 40-g peak acceleration (table),
  32-in./s peak velocity, and
  ± 2.75 in. displacement.

The system is controllable over a frequency range of 0-200 Hz. The system is programmed and controlled by a Gen Rad vibration control system that allows for transient vibration control. A photograph of this facility (with calibration weights mounted on the table) is shown in Fig. B-2.

Fig. B-1. Sandia National Laboratory seismic simulator used in this program.

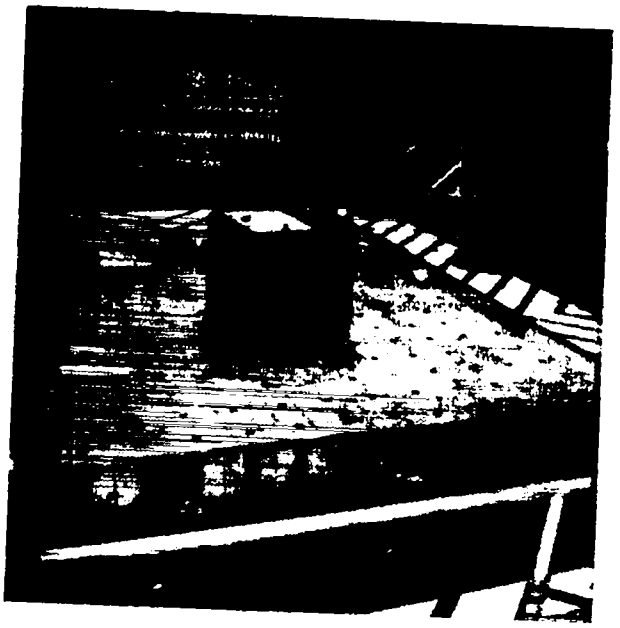

Fig. B-2. Construction Engineering Laboratory seismic simulator used in this program.

APPENDIX C

ANALYTICAL DETAILS

A three-degree-of-freedom lumped mass model was used to determine analytical values for the natural frequencies and mode shapes of the 1/42-scale auxiliary building. This appendix will develop the lumped mass model, analyze the model to determine the structures dynamic properties, and show how the results may be scaled to determine the dynamic properties of the 1/14-scale structure. To simplify the analysis, the structures were considered to be undamped systems* with their free vibration described by the following equation of motion,

$$[m]\{\ddot{x}\} + [k]\{x\} = \{0\} \quad ,$$

where

[m] is a 3 x 3 mass matrix,

[k] is a 3 x 3 stiffness matrix,

$\{\ddot{x}\}$ is a 3 x 1 vector of floor acceleration, and

{x} is a 3 x 1 vector of floor displacements.

We begin the development of the lumped mass model by determining the stiffness coefficients that form [k]. The first step in determining the stiffness coefficients is to evaluate the cross-sectional moment-of-inertia of the structure using the method of transformed sections, as in

---

* Previous tests have shown damping for similar structures (i.e. two-story diesel generator buildings) to be between 5% and 8% of critical. It is assumed that neglecting damping of this order does not significantly effect the determination of the structure's dynamic properties.

$$I_{section} = I_{concrete} + I_{steel}$$

$$I_{concrete} = 2\left[\frac{1}{12}\ 1\text{ in. }(26\text{ in.})^3\right] + 2\left[\frac{1}{12}\ 24\text{ in. }(1\text{ in.})^3 + (12.5\text{ in.})^2\ (24\text{ in. }1\text{ in.})\right] = 10{,}430\text{ in.}^4 \quad .$$

Reinforcement is 1/2-in. weld wire mesh, 0.042-in. diam.,

cross-sectional area $\left(A_{steel}\right) = \frac{\pi(0.042\text{ in.})^2}{4} = 0.00139\text{ in.}^2$,

modulus of elasticity, steel $\left(E_s\right) = 25.6 \times 10^6$ psi* ,

modulus of elasticity, concrete $\left(E_c\right) = 2.6 \times 10^6$ psi** ,

$$\text{modular ratio (n)} = \frac{25.6 \times 10^6}{2.6 \times 10^6} = 9.85 \quad .$$

Transformed cross-sectional steel area = $As_T = nAs = 0.0136\text{ in.}^2$

$$I_{steel} = 2\left(47 \cdot (12.03\text{ in.})^2\ As_T\right) + 2\left(53 \cdot (12.97)^2\ As_T\right) + 4\left[2\left(\sum_{j=1}^{12}(i - 0.5)^2 + \sum_{j=1}^{12} i^2\right)As_T\right] + 4(12.5)^2\ As_T = 570\text{ in.}^4 \quad .$$

Note: This calculation neglects the moment-of-inertia of the steel about its own axis and only uses the transfer of axis term

$$I_{section} = 10{,}430\text{ in.}^4 + 570\text{ in.}^4 = 11{,}000\text{ in.}^4 \quad .$$

---

* Determined for tensile test of wire.

** Determined indirectly from compressive test of a typical concrete using empirical relationship $E_c = 57{,}000\ \sqrt{f'_c}$.

The effective shear area was considered to be the portion of the walls parallel to the excitation direction effective shear area of concrete (A_e) = 2•26 in.•1 in. = 52 in.^{2} height of a individual story (L) = 10 in. The shear modulus (G) for concrete, assuming a Poisson's ratio (ν) of 0.2, is

$$G = \frac{E_c}{2(1 + \nu)} = \frac{2.6 \times 10^6}{2(1 + .2)} = 1.08 \times 10^6 \text{ psi} \quad .$$

The stiffness for a individual floor (k) can be determined, assuming the bottom is fixed and the top is free, as follows:

$$\frac{1}{k} = \frac{1}{k_B} + \frac{1}{k_s} = \frac{L^3}{3E_c I_{section}} + \frac{L}{A_e G} \quad ,$$

where K_B = bending stiffness
K_s = shear stiffness

$$K = \frac{1}{\dfrac{(10 \text{ in.}^3)}{3(2.6 \times 10^6 \text{psi})11{,}000 \text{ in.}^4} + \dfrac{10 \text{ in.}}{(52 \text{ in.}^2)1.08 \times 10^6 \text{ psi}}} = 5.28 \times 10^6 \frac{\text{lb}}{\text{in.}} \quad .$$

By examining Fig. C-1, we see that the magnitude of the stiffness coefficiencies $|k_{ij}|$ of the matrix [k] is defined as follows:

> $|k_{ij}|$ is the magnitude force a floor, i, required to produce a unit displacement of floor, j, with all other floors held in place.

The matrix [k] can be defined as

$$[k] = \begin{bmatrix} k_1 + k_2 & -k_2 & 0 \\ -k_2 & k_2 + k_3 & -k_3 \\ 0 & -k_3 & k_3 \end{bmatrix} \quad \text{lbs/in.}$$

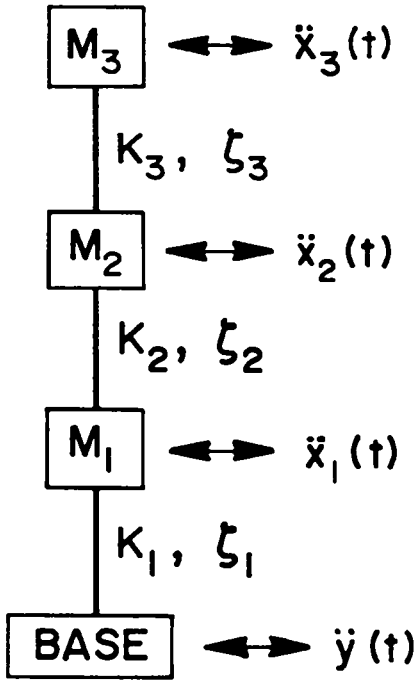

Fig. C-1. Analytical model used to determine the natural frequency and mode shapes of the auxiliary buildings.

And, because $k_1 = k_2 = k_3 = k$,

$$[k] = \begin{bmatrix} 2k & -k & 0 \\ -k & 2k & -k \\ 0 & -k & k \end{bmatrix} \text{ lbs/in.}$$

The lumped mass equivalents for this model were assumed to be the mass of the floor plus one floor thickness of the walls above and below the slab. These masses are assumed to be concentrated at the mid-slab height. A mass density of concrete (ρc), corresponding to 144 lbs/ft^3, was used in the following calculations:

Area of floor 1 = $(26 \text{ in.})^2 = 676 \text{ in.}^2$
Area of floors 2,3 = $(26 \text{ in.})^2 = (8 \text{ in.})^2 = 612 \text{ in.}^2$
Vol. of floor 1 = $676 \text{ in.}^2 \cdot 1 \text{ in.} = 676 \text{ in.}^3$
Vol. of floor 2,3 = $612 \text{ in.}^2 \cdot 1 \text{ in.} = 612 \text{ in.}^3$
Cross-sectional area of wall = $2(26 \text{ in.} \cdot 1 \text{ in.}) + 2(24 \text{ in.} \cdot 1 \text{ in.})$
$= 100 \text{ in.}^2$
Vol. of wall contributing, floors 1,2 = $2 \text{ in.} \times 100 \text{ in.}^2 = 200 \text{ in.}^3$
Vol. of wall contributing, floor 3 = $1 \text{ in.} \times 100 \text{ in.}^2 = 100 \text{ in.}^3$

The elements of the mass matrix [M] are

$$M_{11} = 0.189 \frac{\text{in.} - \text{lbs}}{s^2} = \rho_c \cdot (\text{vol. of floor 1 + contributing vols. of walls}),$$

$$M_{22} = 0.175 \frac{\text{in.} - \text{lbs}}{s^2} = \rho_c \cdot (\text{vol. of floor 2 + contributing vols. of walls}),$$

and

$$M_{33} = 0.154 \frac{\text{in.} - \text{lbs}}{s^2} = \rho_c \cdot (\text{vol. of floor 3 + contributing vols. of walls}).$$

When added mass was placed at a floor, the elements of the mass matrix must be increased by the corresponding amount. Hence for the 1/42-scale structure,

$$M_{11} = \frac{500 \text{ lb}}{386 \text{ in.}/s^2} + 0.189 = 1.484 \frac{\text{in.} - \text{lbs}}{s^2}$$

$$M_{22} = \frac{460 \text{ lb}}{386 \text{ in.}/s^2} + 0.175 = 1.367 \frac{\text{in.} - \text{lbs}}{s^2}$$

$$M_{33} = \frac{395 \text{ lb}}{306 \text{ in.}/s^2} + 0.154 = 1.177 \frac{\text{in.} - \text{lbs}}{s^2}$$

The mass matrix then is defined as:

$$[M] = \begin{bmatrix} M_{11} & 0 & 0 \\ 0 & M_{22} & 0 \\ 0 & 0 & M_{33} \end{bmatrix} .$$

We have now defined all the structure's parameters that make up the three-degree-of-freedom lumped mass model. To solve the equation of motion for the natural frequencies and mode shapes, we begin by assuming that the structure will respond with harmonic motion. Hence, for a particular floor, $x = -\lambda x$ where $\lambda = w^2$ and w are the natural frequencies of the structure, substituting into the equation of motion yields

$$-\lambda [M]\{x\} + [k]\{x\} = 0 \quad , \text{ and}$$

multiply by $[M]^{-1}$ yields

$$[[A] - \lambda[I]]\{x\} = 0 \quad ,$$

where [A] is

$$\begin{bmatrix} \frac{2k}{M_{11}} & \frac{-k}{M_{11}} & 0 \\ \frac{-k}{M_{22}} & \frac{2k}{M_{22}} & \frac{-k}{M_{22}} \\ -0 & \frac{-k}{M_{33}} & \frac{k}{M_{33}} \end{bmatrix}$$

and [I] is the identity matrix.

For this equation to have a nontrivial solution, the determinant

$$|[A] - \lambda [I]| = 0 \ ,$$

and from the resulting characteristic equation we can solve for those values of λ that will make the determinant zero. These values of λ are the squared natural frequencies of the structure in $(\text{radians/s})^2$. Substituting these

values of λ back into Eq. C-1 and solving for {x} gives the corresponding mode shape for the particular value of λ. The values of λ for the 1/42-scale structure with and without added mass and the corresponding frequency values are summarized below.

Without added mass:

$\left(\frac{rad}{s}\right)^2$	$\frac{rad}{s}$	Hz
$\lambda_1 = 6.33 \times 10^6$	$w_1 = 2516$	$f_1 = 400$
$\lambda_2 = 4.70 \times 10^6$	$w_2 = 6855$	$f_2 = 1091$
$\lambda_3 = 9.72 \times 10^6$	$w_3 = 9858$	$f_3 = 1569$.

With added mass:

$\left(\frac{rad}{s}\right)^2$	$\frac{rad}{s}$	Hz
$\lambda_1 = 8.18 \times 10^5$	$w_1 = 904$	$f_1 = 144$
$\lambda_2 = 6.04 \times 10^6$	$w_2 = 2560$	$f_2 = 391$
$\lambda_3 = 1.25 \times 10^7$	$w_3 = 3540$	$f_3 = 561$.

The values calculated above, using the dimensions of the 1/42-scale structure and an assumed concrete modulus (E) of 2.6×10^6 psi, can be converted to any size structure of any modulus as follows:

1) For a 1/42-scale structure with a modulus of 3.07×10^6 psi (i.e., $E = 57{,}000\sqrt{f'_c} = 57{,}000\sqrt{2900} = 3.07 \times 10^6$psi)

$$f_{n_{E = 3.07 \times 10^6}} = \sqrt{\frac{3.07}{2.6}}\, f_{n_{E = 2.6 \times 10^6}} \quad .$$

Hence, $f_1 = 435$ Hz ,
$f_2 = 1185$ Hz , and
$f_3 = 1705$ Hz ,

for the bare model, and

$$f_1 = 156 \text{ Hz} ,$$
$$f_2 = 425 \text{ Hz} , \text{ and}$$
$$f_3 = 60 \text{ Hz}$$

for the massed-added model.

2) For a 1/14-scale structure with a modulus of 3.28×10^6 psi (i.e., E = 57,000 3320 = 3.28×10^6 psi)

$$f_{n_{\frac{1}{14}}, E = 3.28 \times 10^6} = \frac{14}{42} \times \sqrt{\frac{3.28}{2.6}} \times f_{n_{\frac{1}{42}}, E = 2.6 \times 10^6}$$

for the bare model.

Hence,
$$f_1 = 149 \text{ Hz} ,$$
$$f_2 = 408 \text{ Hz} , \text{ and}$$
$$f_3 = 587 \text{ Hz} .$$

For the mass-added, 1/14-scale model

$$f_{n_{\frac{1}{14}}, E = 3.28 \times 10^6} = \frac{14}{42} \times \sqrt{\frac{3.28}{2.6}} \times f_{n_{\frac{1}{42}}, E = 2.6 \times 10^6} .$$

Hence,
$$f_1 = 93 \text{ Hz} ,$$
$$f_2 = 253 \text{ Hz} , \text{ and}$$
$$f_3 = 363 \text{ Hz} .$$

DISTRIBUTION

	Copies
Nuclear Regulatory Commission, RD, Laurel, Maryland	248
Technical Information Center, Oak Ridge, Tennessee	2
Los Alamos National Laboratory, Los Alamos, New Mexico	50
	300

NRC FORM 335 (2-84) NRCM 1102, 3201, 3202

U.S. NUCLEAR REGULATORY COMMISSION

BIBLIOGRAPHIC DATA SHEET

SEE INSTRUCTIONS ON THE REVERSE

1 REPORT NUMBER (Assigned by TIDC, add Vol. No., if any)

NUREG/CR-4987
LA-11093-MS

2 TITLE AND SUBTITLE

Simulated Seismic Tests on 1/42- and 1/14-Scale Category I, Auxiliary Building

3 LEAVE BLANK

4 DATE REPORT COMPLETED

MONTH	YEAR
July	1987

5 AUTHOR(S)

Joel G. Bennett, Richard C. Dove, Wade E. Dunwoody, Elton Endebrock, Charles Farrar, and Peggy Goldman

6 DATE REPORT ISSUED

MONTH	YEAR
October	1987

7. PERFORMING ORGANIZATION NAME AND MAILING ADDRESS (Include Zip Code)

Los Alamos National Laboratory
Box 1663
Los Alamos, NM 87545

8. PROJECT/TASK/WORK UNIT NUMBER

9 FIN OR GRANT NUMBER

A7221

10. SPONSORING ORGANIZATION NAME AND MAILING ADDRESS (Include Zip Code)

Division of Engineering
Office of Nuclear Regulatory Research
U.S. Nuclear Regulatory Commission
Washington, DC 20555

11a TYPE OF REPORT

Informal

b PERIOD COVERED (Inclusive dates)

12 SUPPLEMENTARY NOTES

13. ABSTRACT (200 words or less)

Two scale-model structures representing an idealized auxiliary building were seismically tested. The scales (1/42, 1/14) were chosen so that both structures were models of the prototype, and the 1/42-scale model was a 1/3-scale model of the 1/14-scale structure. Both models were constructed out of microconcrete. The 1/42-scale used wire mesh to simulate reinforcing, and the 1/14 scale used model deformed bars. The general result verified previous test experience in this program: the frequency response of these structures, when subjected to seismic design loads, will be below that predicted from the structural analysis. The implication of this result for equipment and piping is under investigation. The recommendation of this program, based on testing thus far, is to verify the conclusions on larger real concrete structures of a geometry that will be agreed upon by the technical review group for this program.

14 DOCUMENT ANALYSIS – a KEYWORDS/DESCRIPTORS

b. IDENTIFIERS/OPEN-ENDED TERMS

15 AVAILABILITY STATEMENT

Unlimited

16 SECURITY CLASSIFICATION

(This page)

Unclassified

(This report)

Unclassified

17. NUMBER OF PAGES

18 PRICE

Available from
Superintendent of Documents
U.S. Government Printing Office
Post Office Box 37082
Washington, D. C. 20013-7982

and

National Technical Information Service
Springfield, VA 22161

Los Alamos